REVISIONS					
ECR	REVISION	DESCRIPTION	CHANGED BY	DATE	APPROVED BY
3632	A	NEW RELEASE	DH	6/29/2018	RT

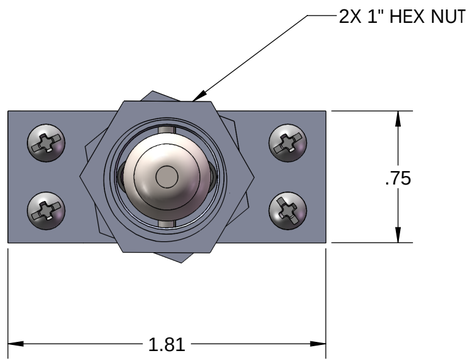

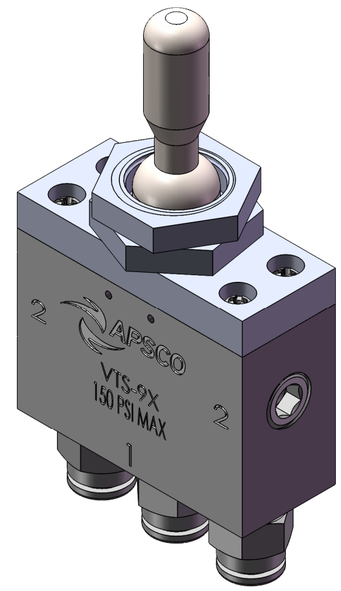

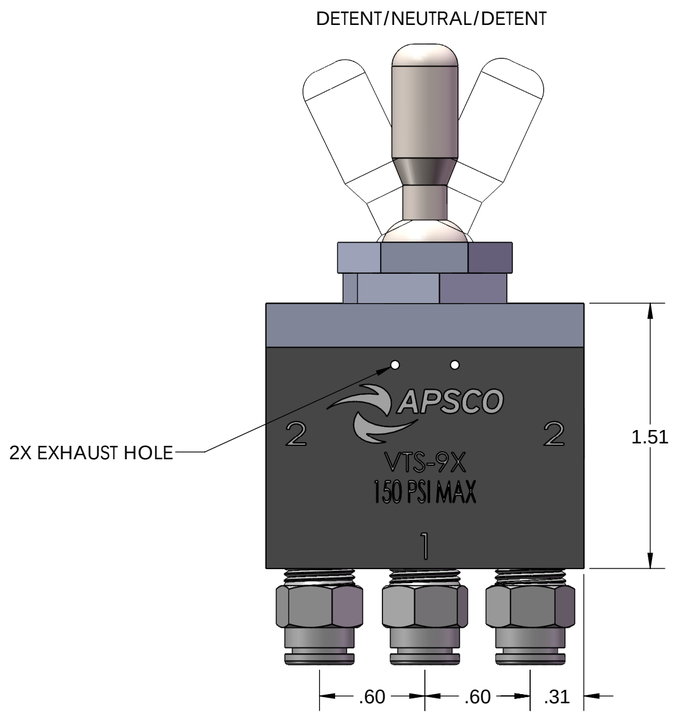

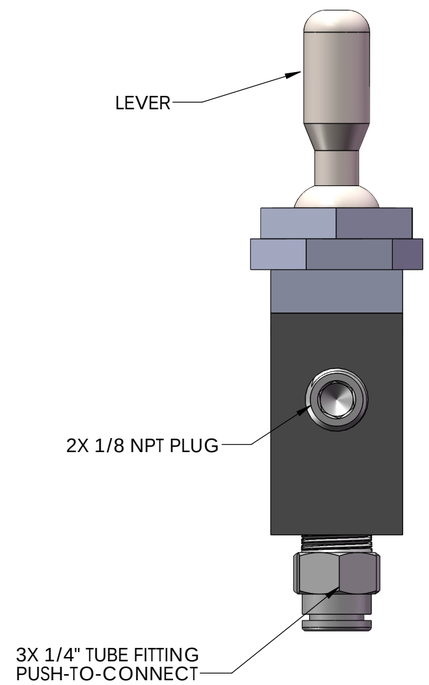

PROPRIETARY AND CONFIDENTIAL
THE INFORMATION CONTAINED IN THIS DRAWING IS THE SOLE PROPERTY OF **APSCO Inc.**. ANY REPRODUCTION IN PART OR AS A WHOLE WITHOUT WRITTEN PERMISSION OF **APSCO Inc.** IS PROHIBITED.

TYPE OF PROJECTION
THIRD ANGLE PROJECTION

MATERIAL: N/A

FINISH: N/A

DRAWN	DH	DATE 6/29/2018
CHECKED	RR	DATE 6/29/2018
APPROVED	RT	DATE 6/29/2018
FINAL	RT	DATE 6/29/2018

APSCO
8178 EAST 44TH STREET
TULSA, OK 74145
(918) 622-5600

TITLE: VAVLE TOGGLE 3-POSITION D/N/D

UNLESS OTHERWISE SPECIFIED
DIMENSIONS ARE IN INCHES
TOLERANCES ARE:

DECIMALS
.X = ±.06
.XX = ±.03
.XXX = ±.010

SURFACE FINISH: 63
ANGLES ± 2°
HOLES ± .005
HOLES LOCATION ± .005

DO NOT SCALE DRAWING

DWG. NO. VTS-9X

SHEET SIZE	SCALE	REVISION
C	3:2	A

F/N: VTS-9X

SHT. 1 OF 2