REVISIONS				
ECR	REV.	DESCRIPTION	DATE	APPROVED
E2009	A	REVISED TO NEW FORMAT	02/05/2013	JUMPER

NOTE:

1. ALUMINIUM CAST BODY
2. FULLY PROPORTIONAL (0-100 PSI)
3. 150 PSI MAX SUPPLY
4. STACKABLE WITH ONE COMMON SUPPLY INLET & EXHAUST
5. REMOVABLE LENSE FOR LABELING
6. VARIOUS DETENT OPTIONS AVAILABLE
7. STRAIGHT, 20°, 35°, 45°, 55° ANGLED HANDLES AVAILABLE FOR STACKING OPTIONS
8. TEMPERATURE -20/200F

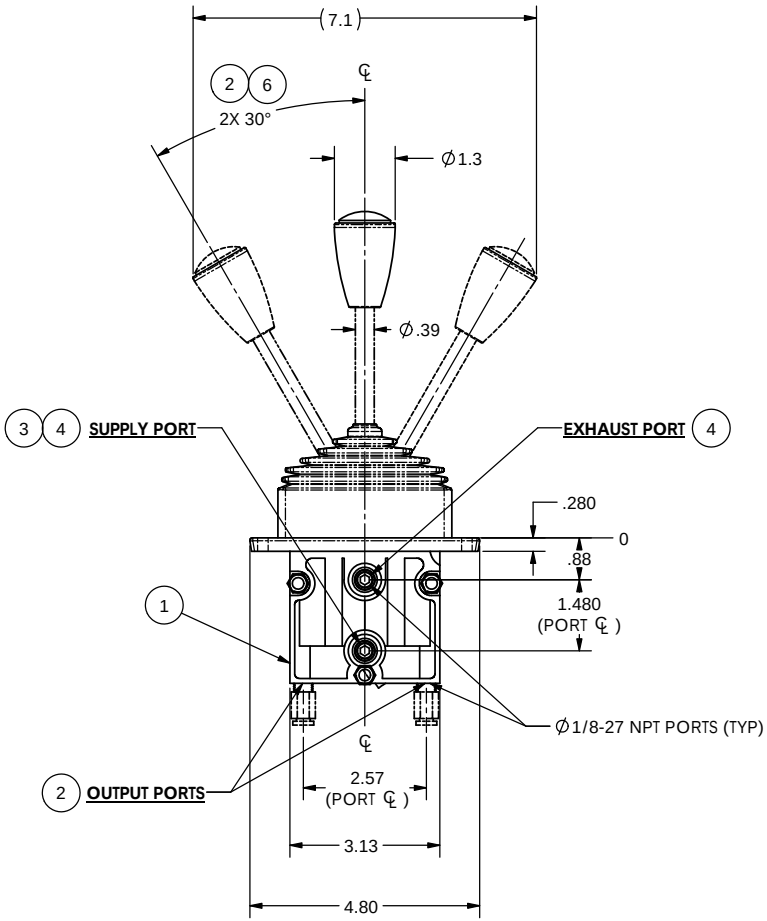

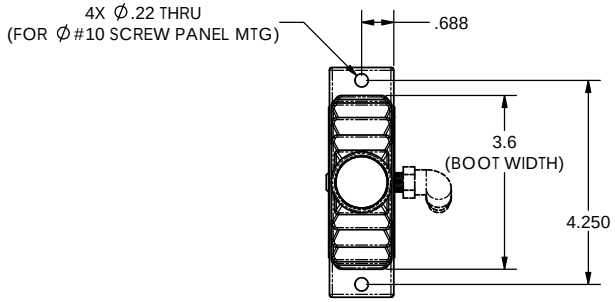

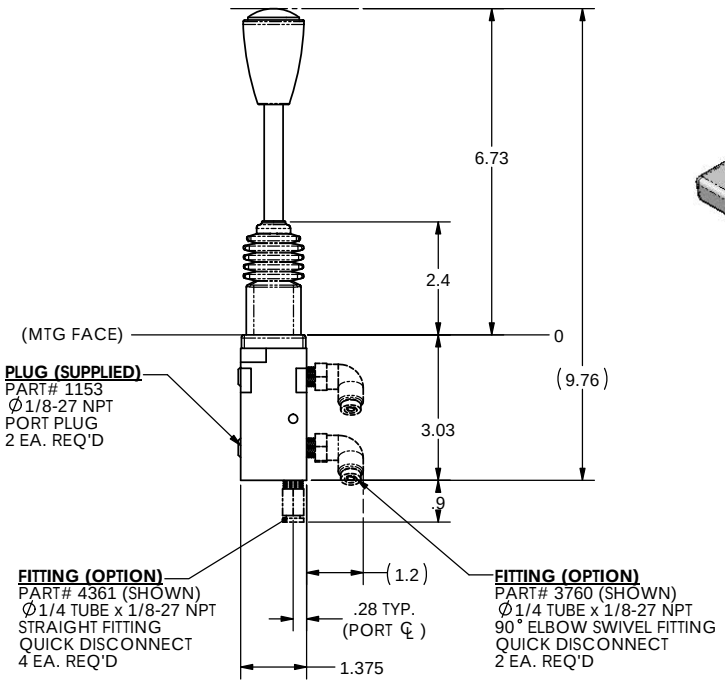

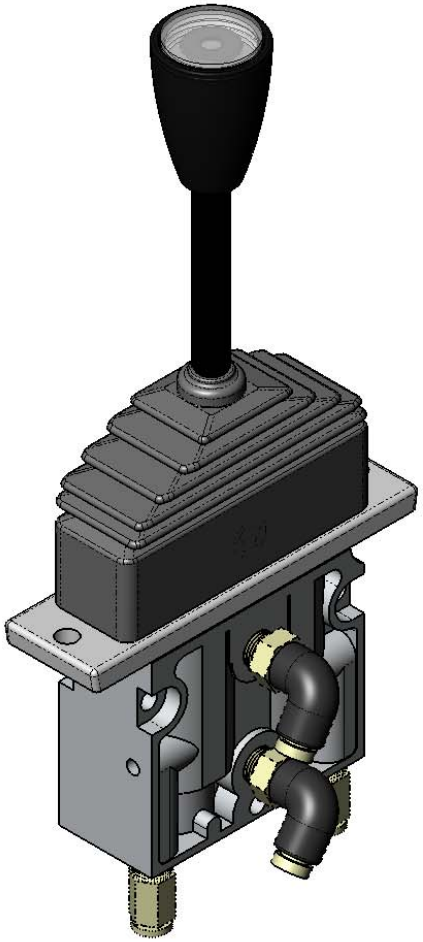

TYPE OF PROJECTION

THIRD ANGLE PROJECTION

PROPRIETARY AND CONFIDENTIAL

THE INFORMATION CONTAINED IN THIS DRAWING IS THE SOLE PROPERTY OF **APSCO Inc.**. ANY REPRODUCTION IN PART OR AS A WHOLE WITHOUT WRITTEN PERMISSION OF **APSCO Inc.** IS PROHIBITED.

DO NOT SCALE DRAWING

UNLESS OTHERWISE SPECIFIED
DIMENSIONS ARE IN INCHES
TOLERANCES ARE:
DECIMALS
.X = ±.03
.XX = ±.010
.XXX = ±.005
FRACTION = ±.015
ANGLES = ±1/2°

SURFACE TEXTURE OR BETTER

MATERIAL: N/A

FINISH: N/A

APSCO Inc.
8178 EAST 44TH STREET
TULSA, OK 74145

TITLE: VALVE M/N/M STRAIGHT

DWG. NO. VM-7

REV A

SIZE B

DRAWN JUMPER

DATE 02/05/2013

CLASS

F/N: VM-7,8,9

SHT. 1 OF 1